SALSA WARBIRD V4 - FRONT TRIANGLE FRAME BAG GUIDE

- Unless noted all dimensions are in millimeters
- All dimensions are ±2mm
- Drawing size is 68 x 44", scale 1:1
- Scale drawing 1:4 (25%) to print on 11 x 17" paper

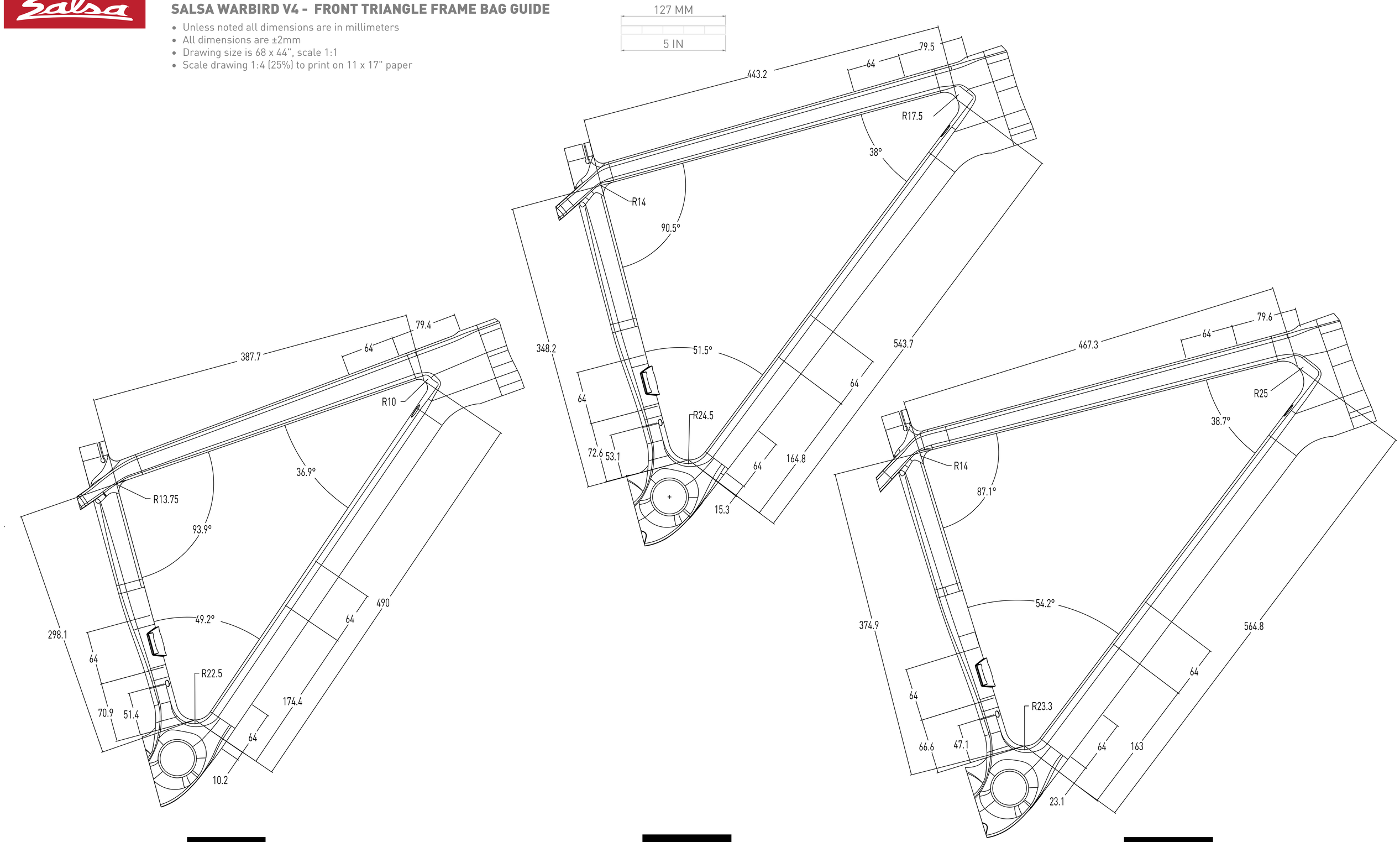

SALSA WARBIRD V4 - FRONT TRIANGLE FRAME BAG GUIDE

- Unless noted all dimensions are in millimeters
- All dimensions are ±2mm
- Drawing size is 68 x 44", scale 1:1
- Scale drawing 1:4 (25%) to print on 11 x 17" paper

127 MM

5 IN

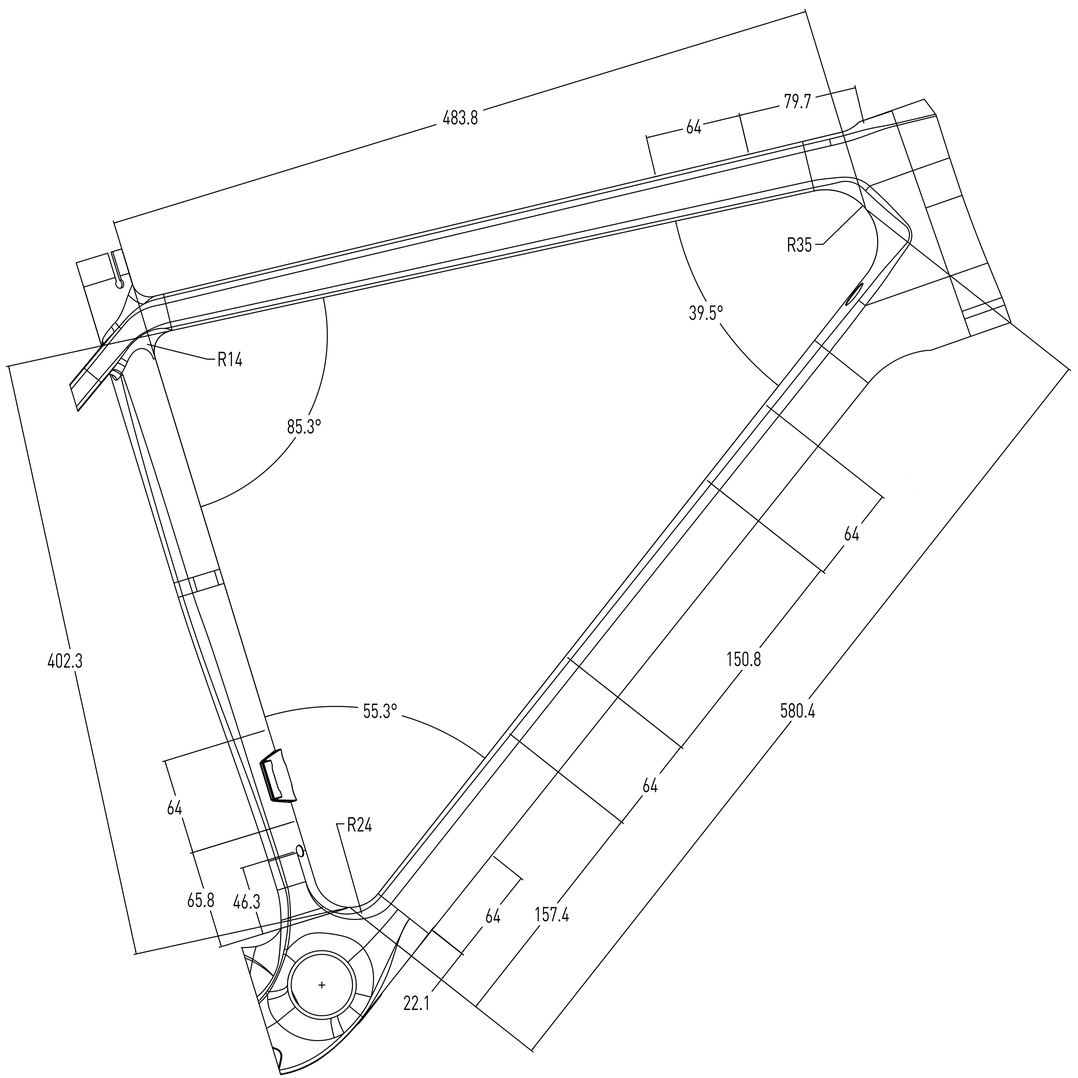

56cm

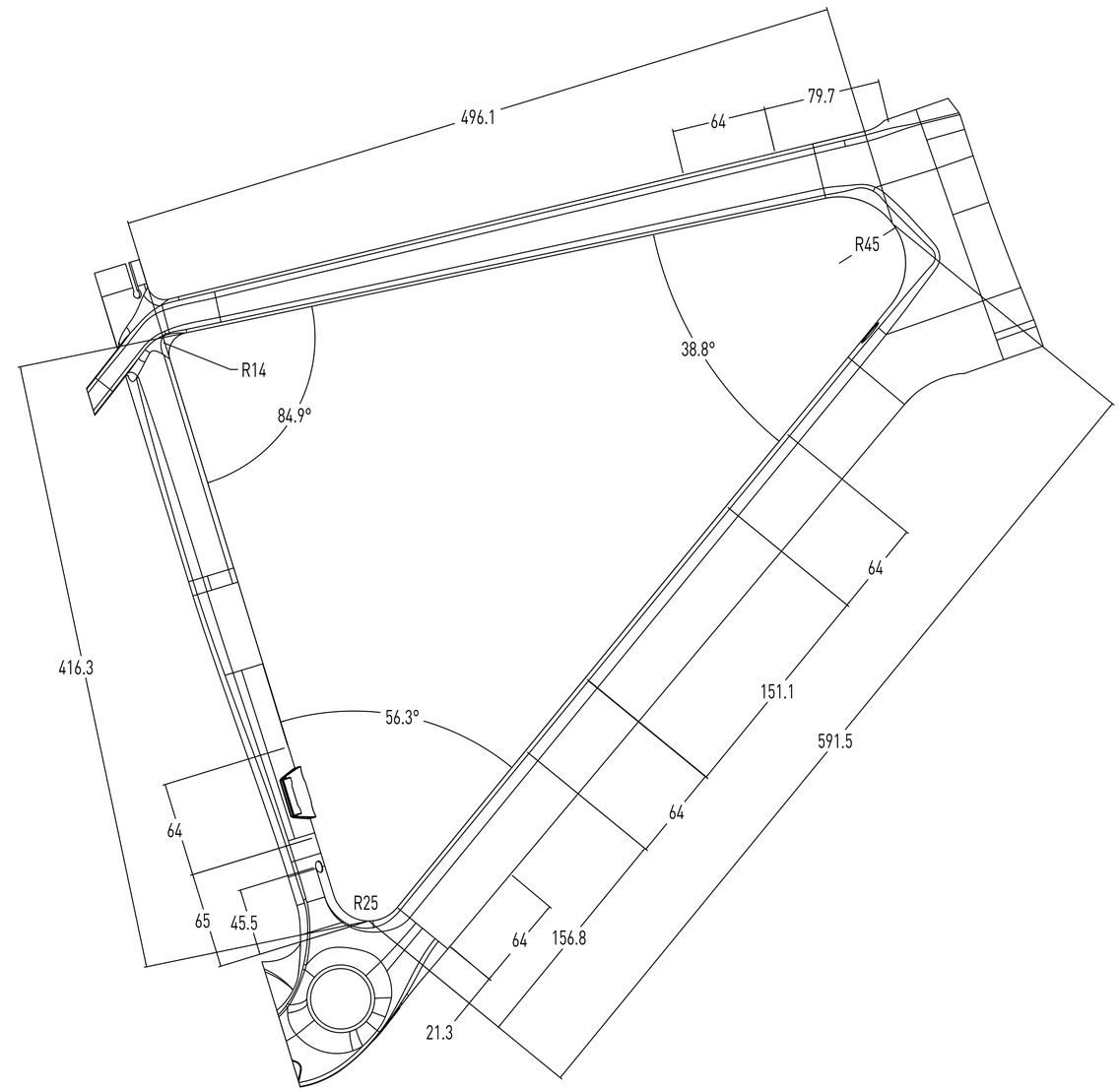

57.5cm

SALSA WARBIRD V4 - FRONT TRIANGLE FRAME BAG GUIDE

- Unless noted all dimensions are in millimeters
- All dimensions are ±2mm
- Drawing size is 68 x 44", scale 1:1
- Scale drawing 1:4 (25%) to print on 11 x 17" paper

127 MM

5 IN

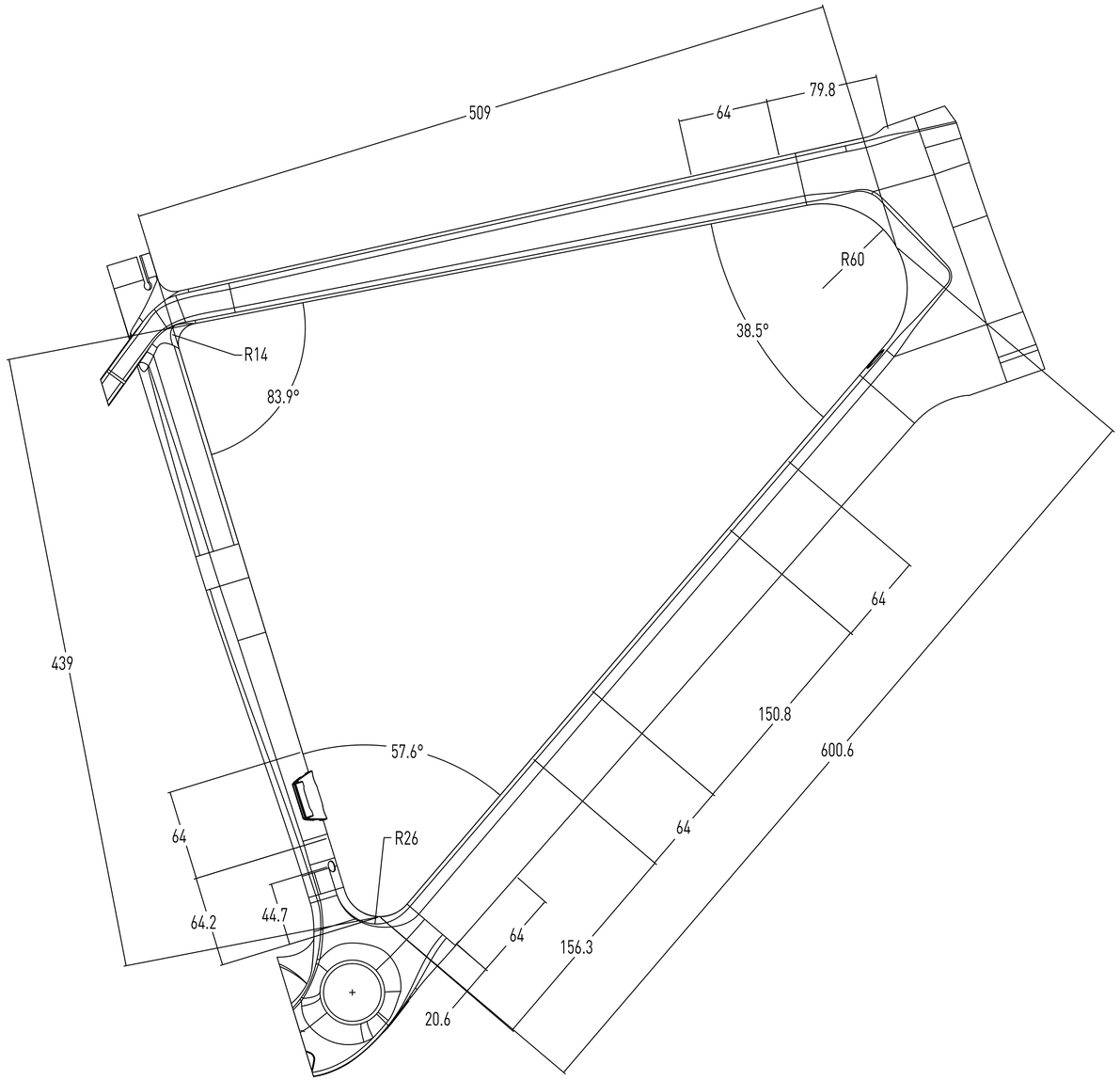

59cm

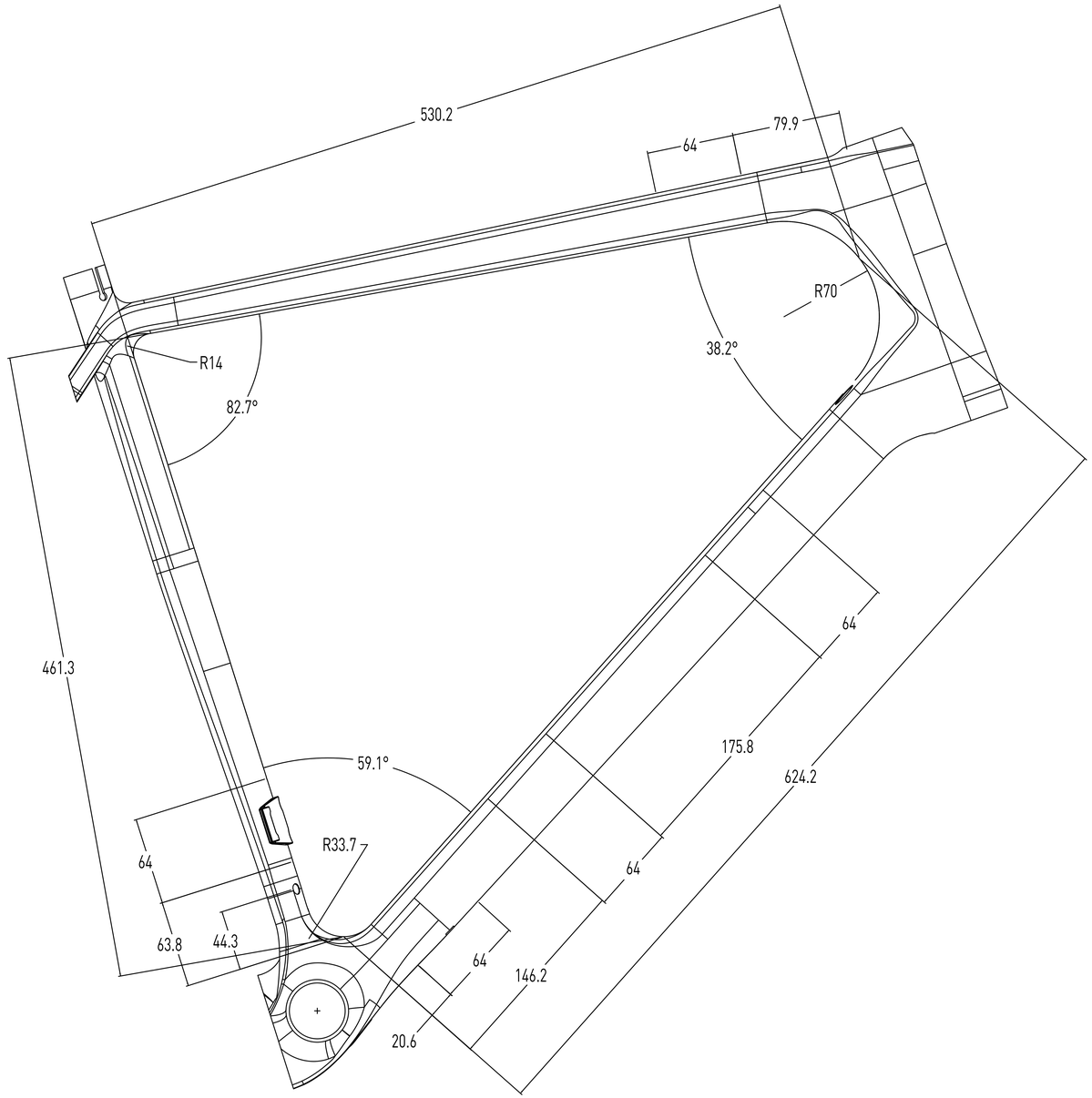

61cm